RX 10 M DHP (Locking) with signal red drip tray

Lockable Plastic Euro dispenser for soaps, disinfectants and lotions

Art. No. 4402751

OPHARDT HYGIENE

OPHARDT HYGIENE-TECHNIK GmbH
Lindenau 27 | 47661 Issum | Germany
Tel.: +49 (0) 28 35 18-10 | Fax +49 (0) 28 35 18-77
planer@ophardt.com | www.ophardt.com

RX 10 M

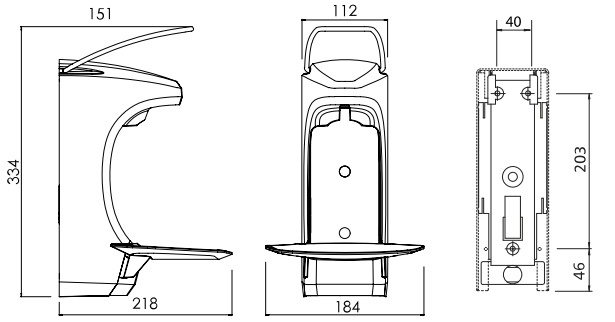

Maße in mm - Dimensions in mm



References
hospitals, clinics, retirement/care homes, dental practices, fitness and sports centres, restaurants, commercial kitchen, industry, conference centres, laboratories, food processing areas, rehabilitation facilities, rescue stations, administration facilities, kindergardens, schools, shopping centres, train stations, hotels

Usage examples
Passage area, entrance area, nursing and examination rooms, therapy rooms, kitchens, general wards

Technical data

Dispenser type:	Euro bottle dispenser
Housing:	Plastic, white
Filling volume (ml):	1000 ml
Dosing pump:	recyclable DHP disposable plastic pump
Dosage quantity:	1.5 ml/stroke
Filling good:	Disinfectant, Liquid soaps (without Grit)
Operating type:	short operating stainless steel lever
with drip tray:	Yes
Lock:	ingo-man vandalism-proof lock made of plastic
Wall bracket:	Standard ingo-man® plastic wall plate
Mounting:	Wall mounting with 4 screws and wall plugs
Cleaning:	manual wipe disinfection, not dishwashersafe, not autoclavable
Net weight:	0.73 kg
Dimensions (W x H x D) in mm:	184x334x218
Note:	Before using new products, please always check the compatibility of the product and the dispensing system to ensure proper functionality.

Compatible accessories

Hygiene Station E ST Hygiene station for hand disinfection with robust base plate	Art. No. 1420177
disinfection point Robust column for effective hand disinfection	Art. No. 3400177

Please see other accessories in our Online Product Catalogue.