# IMP E A/28

Euro dispenser with pump front removal for soaps and disinfectants
Art. No. 1417631

**OPHARDT HYGIENE-TECHNIK GmbH**
Lindenau 27 | 47661 Issum | Germany
Tel.: +49 (0) 28 35 18-10 | Fax +49 (0) 28 35 18-77
planer@ophardt.com | www.ophardt.com

IMP E

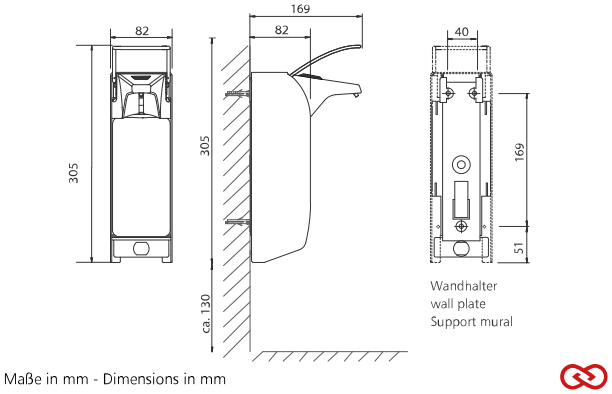


Maße in mm - Dimensions in mm



**References**
hospitals, clinics, retirement/care homes, dental practices, restaurants, commercial kitchen, industry, laboratories, food processing areas, rehabilitation facilities, rescue stations

**Usage examples**
Passage area, entrance area, Intensive care units, dialysis stations, surgery areas, nursing and examination rooms, clean room, therapy rooms

**Technical data**

| | |
|---|---|
| Dispenser type: | Euro bottle dispenser |
| Housing: | Aluminium, matte silver anodized |
| Face shield: | ABS Plastic, white |
| Filling volume (ml): | 500 ml |
| Dosing pump: | long-life stainless steel pump with flexible plastic suction tube |
| Dosage quantity: | 0.75 / 1.0 / 1.2 / 1.5 ml/stroke |
| Filling good: | Disinfectant, Liquid soaps (without Grit) |
| Operating type: | short operating stainless steel lever |
| Wall bracket: | Standard ingo-man® plastic wall plate |
| Mounting: | Wall mounting with 4 screws and wall plugs |
| Cleaning: | dishwashersafe (60° C), autoclavable up to 134° C, 2 bar |
| Warranty: | 8 years |
| Dimensions (W x H x D) in mm: | 82x305x169 |
| Note: | Before using new products, please always check the compatibility of the product and the dispensing system to ensure proper functionality. |

**Compatible accessories**

| | |
|---|---|
| ingo-man® SmartNose E<br>Intelligent retrofit module for digital hand hygiene | Art. No. 4402674 |
| DHP IMP E<br>Recyclable disposable hygiene pump for IMP Euro bottle dispensers | Art. No. 4401857 |

Please see other accessories in our Online Product Catalogue.