IMP T P/K

Euro dispenser with pump front removal for soaps, disinfectants and sun protection creams
Art. No. 1417595

OPHARDT HYGIENE-TECHNIK GmbH
Lindenau 27 | 47661 Issum | Germany
Tel.: +49 (0) 28 35 18-10 | Fax +49 (0) 28 35 18-77
planer@ophardt.com | www.ophardt.com

IMP T

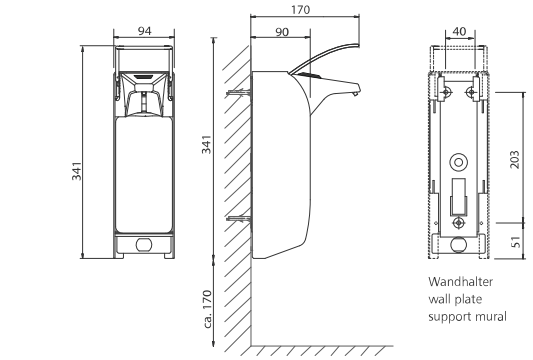

Maße in mm - Dimensions in mm



8 YEARS WARRANTY

References
hospitals, clinics, retirement/care homes, dental practices, restaurants, commercial kitchen, industry, laboratories, food processing areas, rehabilitation facilities, rescue stations

Usage examples
Passage area, entrance area, Intensive care units, dialysis stations, surgery areas, nursing and examination rooms, clean room, therapy rooms

Technical data

Dispenser type:	Euro bottle dispenser
Housing:	Aluminium, white powder-coated (RAL 9010)
Face shield:	ABS Plastic, white
Filling volume (ml):	1000 ml
Dosing pump:	long-life plastic pump with straight suction tube
Dosage quantity:	0.7 / 1.0 / 1.5 ml/stroke
Filling good:	Disinfectant, Liquid soaps (without Grit), Sun protection cream (up to SPF 50)
Operating type:	short operating stainless steel lever
Wall bracket:	Standard ingo-man® plastic wall plate
Mounting:	Wall mounting with 4 screws and wall plugs
Cleaning:	dishwashersafe (60° C)
Warranty:	8 years
Dimensions (W x H x D) in mm:	94x341x170
Note:	Before using new products, please always check the compatibility of the product and the dispensing system to ensure proper functionality.

Compatible accessories

ingo-man® SmartNose T Intelligent retrofit module for digital hand hygiene	Art. No. 4403161
DHP IMP T Recyclable disposable hygiene pump for IMP Euro bottle dispensers	Art. No. 4401858

Please see other accessories in our Online Product Catalogue.