KX 1000 M E ST C1

Plastic cartridge dispenser for hand hygiene
Art. No. 1425362

OPHARDT HYGIENE

OPHARDT HYGIENE-TECHNIK GmbH
Lindenau 27 | 47661 Issum | Germany
Tel.: +49 (0) 28 35 18-10 | Fax +49 (0) 28 35 18-77
planer@ophardt.com | www.ophardt.com

KX 1000 M E ST

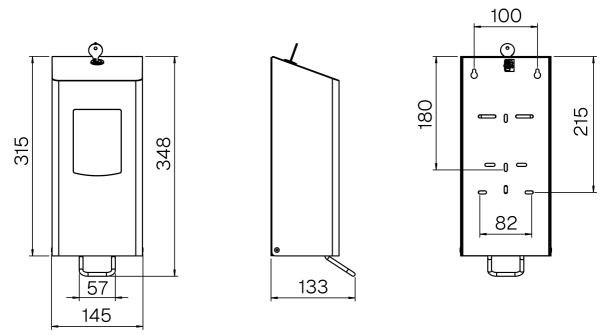



Maße in mm - Dimensions in mm

References
retirement/care homes, clinics, hospitals, laboratories, commercial kitchen, food processing areas, industry, shopping centres, restaurants, hotels, airports, schools, fitness and sports centres, administration facilities

Usage examples
washrooms, toilets, baths, nursing and examination rooms, general wards, kitchens, production facilities, entrance area, Passage area

Technical data

Housing:	Stainless steel, brushed with Anti-Fingerprint-Coating (Steel Touch)
Filling volume (ml):	1000 ml
Dosing pump:	single-use plastic pump
Filling good:	Foam soap, Liquid soaps (without Grit), Grit, Disinfectant, Alco-Foam, Hand Sanitizer Gel, Paste and Cream, Lotion, Liquid
Operating type:	short operating stainless steel lever
with/without viewing window:	Clear
Lock:	ingo-man vandalism-proof lock made of stainless steel
Wall bracket:	with integrated wall plate
Mounting:	Wall mounting with 4 screws and wall plugs
Cleaning:	manual wipe disinfection, not dishwashersafe, not autoclavable
Net weight:	1.59 kg
Dimensions (W x H x D) in mm:	145x348x133
Note:	Before using new products, please always check the compatibility of the product and the dispensing system to ensure proper functionality.

Compatible accessories

X Stand black Robust stand for KX and Neptune dispenser system	Art. No. FS-001-B
X Stand grey-white Robust stand for KX and Neptune dispenser system	Art. No. FS-001

Please see other accessories in our Online Product Catalogue.