IMP ELS P/DHP

Euro dispenser with pump front removal for soaps and disinfectants
Art. No. 4402106

OPHARDT HYGIENE-TECHNIK GmbH
Lindenau 27 | 47661 Issum | Germany
Tel.: +49 (0) 28 35 18-10 | Fax +49 (0) 28 35 18-77
planer@ophardt.com | www.ophardt.com

IMP ELS

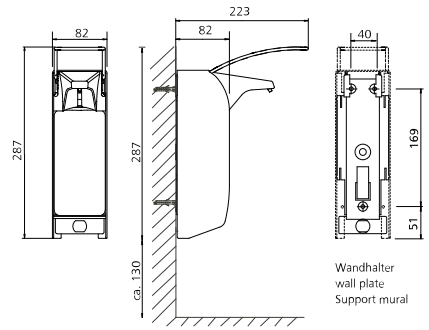



Maße in mm - Dimensions in mm

References
hospitals, clinics, retirement/care homes, dental practices, restaurants, commercial kitchen, industry, laboratories, food processing areas, rehabilitation facilities, rescue stations

Usage examples
Passage area, entrance area, Intensive care units, dialysis stations, surgery areas, nursing and examination rooms, clean room, therapy rooms

Technical data

Dispenser type:	Euro bottle dispenser
Housing:	Aluminium, white powder-coated (RAL 9010)
Face shield:	ABS Plastic, white
Filling volume (ml):	500 ml
Dosing pump:	recyclable DHP disposable plastic pump
Dosage quantity:	1.5 ml/stroke
Filling good:	Disinfectant, Liquid soaps (without Grit)
Operating type:	long operating stainless steel lever
Wall bracket:	Standard ingo-man® plastic wall plate
Mounting:	Wall mounting with 4 screws and wall plugs
Cleaning:	dishwashersafe (60° C)
Warranty:	8 years
Dimensions (W x H x D) in mm:	82x287x223
Note:	Before using new products, please always check the compatibility of the product and the dispensing system to ensure proper functionality.

Compatible accessories

ingo-man® SmartNose E Intelligent retrofit module for digital hand hygiene	Art. No. 4402674
DHP IMP E Recyclable disposable hygiene pump for IMP Euro bottle dispensers	Art. No. 4401857

Please see other accessories in our Online Product Catalogue.