IMS TLS A/24

Smart Euro bottle dispensers for soaps and hand disinfectants
Art. No. 4403187

OPHARDT HYGIENE

OPHARDT HYGIENE-TECHNIK GmbH
Lindenau 27 | 47661 Issum | Germany
Tel.: +49 (0) 28 35 18-10 | Fax +49 (0) 28 35 18-77
planer@ophardt.com | www.ophardt.com

IMS TLS

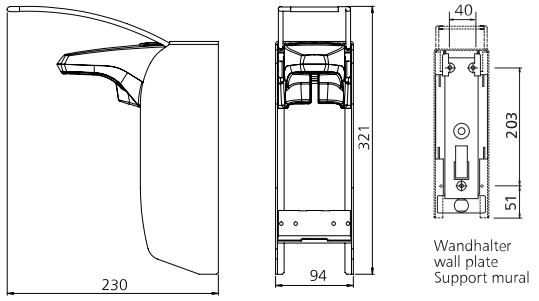

Maße in mm - Dimensions in mm



8 YEARS WARRANTY

References
hospitals, clinics, retirement/care homes, laboratories, rehabilitation facilities

Usage examples
Passage area, entrance area, Intensive care units, dialysis stations, surgery areas, nursing and examination rooms, clean room, therapy rooms

Technical data

Dispenser type:	Euro bottle dispenser
Housing:	Aluminium, matte silver anodized
Face shield:	ABS Plastic, white
Filling volume (ml):	1000 ml
Dosing pump:	long-life stainless steel pump with bent suction tube
Dosage quantity:	0.75 / 1.0 / 1.2 / 1.5 ml/stroke
Filling good:	Disinfectant, Liquid soaps (without Grit)
Operating type:	long operating stainless steel lever
Software:	Dispenser with integrated Smart Module enables automatic fill level detection and connection to KANARY as well as third-party platforms
Wall bracket:	Standard ingo-man® plastic wall plate
Mounting:	Wall mounting with 4 screws and wall plugs
Cleaning:	manual wipe disinfection, not dishwashersafe, not autoclavable
Warranty:	8 years or 1 Million activations
Dimensions (W x H x D) in mm:	94x321x230
Note:	Before using new products, please always check the compatibility of the product and the dispensing system to ensure proper functionality.

Compatible accessories

DHP IMP T Recyclable disposable hygiene pump for IMP Euro bottle dispensers	Art. No. 4401858
DHP IMP T Shower Recyclable disposable hygiene pump with "Shower Head" for IMP Euro bottle dispensers	Art. No. 4403467

Please see other accessories in our Online Product Catalogue.