ingo-man® go T K Pump Unit

High-quality plastic pump for ingo-man® go Euro dispensers
Art. No. 4403878

OPHARDT HYGIENE

OPHARDT HYGIENE-TECHNIK GmbH
Lindenau 27 | 47661 Issum | Germany
Tel.: +49 (0) 28 35 18-10 | Fax +49 (0) 28 35 18-77
planer@ophardt.com | www.ophardt.com

IM GO T K Pump

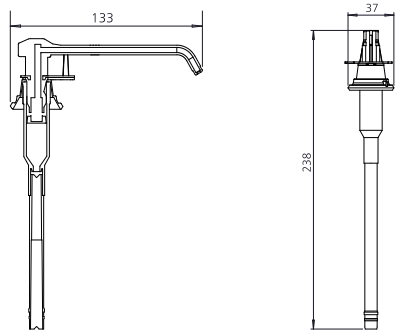

Maße in mm - Dimensions in mm



References
hospitals, clinics, retirement/care homes, dental practices, restaurants, commercial kitchen, industry, conference centres, laboratories, food processing areas, rehabilitation facilities, rescue stations, administration facilities

Usage examples
Passage area, entrance area, Intensive care units, surgery areas, nursing and examination rooms, therapy rooms, general wards

Technical data

Filling volume (ml):	1000 ml
Dosing pump:	long-life plastic pump with straight suction tube
Dosage quantity:	1.5 ml/stroke
Filling good:	Liquid soaps (without Grit), Disinfectant
Cleaning:	dishwashersafe (60° C)
Net weight:	0.02 kg
Dimensions (W x H x D) in mm:	37x238x133
Note:	Before using new products, please always check the compatibility of the product and the dispensing system to ensure proper functionality.