ELS 26 A/25

Manual Euro dispenser for soaps, disinfectants and lotions
Art. No. 1115400

OPHARDT HYGIENE-TECHNIK GmbH
Lindenau 27 | 47661 Issum | Germany
Tel.: +49 (0) 28 35 18-10 | Fax +49 (0) 28 35 18-77
planer@ophardt.com | www.ophardt.com

ELS 26

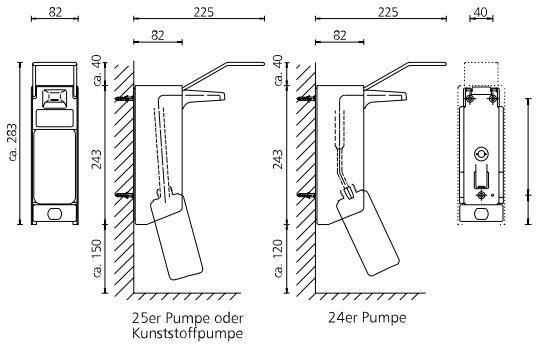

Maße in mm - Dimensions in mm



References
retirement/care homes, dental practices, restaurants, commercial kitchen, industry, conference centres, laboratories, food processing areas, rehabilitation facilities, rescue stations, administration facilities

Usage examples
Passage area, entrance area, Intensive care units, surgery areas, nursing and examination rooms, therapy rooms

Technical data

Dispenser type:	Euro bottle dispenser
Housing:	Aluminium, matte silver anodized
Face shield:	ABS Plastic, white
Filling volume (ml):	500 ml
Dosing pump:	long-life stainless steel pump with straight suction tube
Dosage quantity:	0.7 / 1.0 / 1.5 ml/stroke
Filling good:	Liquid soaps (without Grit), Disinfectant
Operating type:	long operating stainless steel lever
Wall bracket:	Standard ingo-man® plastic wall plate
Mounting:	Wall mounting with 4 screws and wall plugs
Cleaning:	dishwashersafe (60° C), autoclavable up to 121° C, 2 bar
Warranty:	5 years
Net weight:	0.77 kg
Dimensions (W x H x D) in mm:	82x283x225
Note:	Before using new products, please always check the compatibility of the product and the dispensing system to ensure proper functionality.

Compatible accessories

SH E 26
Prevents disinfectant from dripping off hands and onto the floor
Art. No. 263800

SH 5 IMP E/ELS
Prevents disinfectant from dripping off hands and onto the floor
Art. No. 1419174

Please see other accessories in our Online Product Catalogue.