SH E 26 drip tray hi-vis orange

Prevents disinfectant from dripping off hands and onto the floor

Art. No. 1418977

OPHARDT HYGIENE-TECHNIK GmbH
Lindenau 27 | 47661 Issum | Germany
Tel.: +49 (0) 28 35 18-10 | Fax +49 (0) 28 35 18-77
planer@ophardt.com | www.ophardt.com

SH E 26 - SH T 26

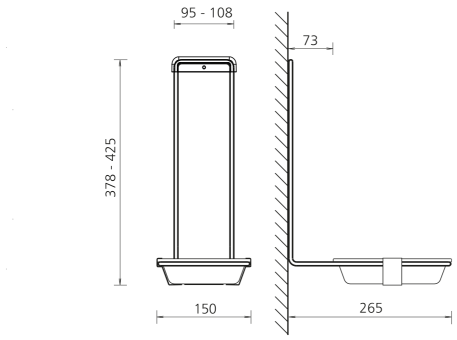

Maße in mm - Dimensions in mm



5 YEAR OPHARDT HYGIENE WARRANTY

References
hospitals, clinics, retirement/care homes, dental practices, commercial kitchen, food processing areas, laboratories, rescue stations, administration facilities

Usage examples
Passage area, entrance area, Intensive care units, dialysis stations, surgery areas, nursing and examination rooms, clean room, therapy rooms

Technical data

rounded/rectangular drip tray:	rectangular drip tray
Filling volume (ml):	500 ml
Touchless/Manual:	for manual dispensers
for dispensers with table holder:	No
Mounting:	for hanging over the dispenser housing
Warranty:	5 years
Net weight:	0.457 kg
Dimensions (W x H x D) in mm:	150x378x265