VH T closure bracket with grey drip tray and lock

Innovative and lockable closure bracket with drip tray for mounting on ingo-man go and ingo-man plus dispensers
Art. No. 4404080

OPHARDT HYGIENE-TECHNIK GmbH
Lindenau 27 | 47661 Issum | Germany
Tel.: +49 (0) 28 35 18-10 | Fax +49 (0) 28 35 18-77
planer@ophardt.com | www.ophardt.com

VH T with lock and drip tray

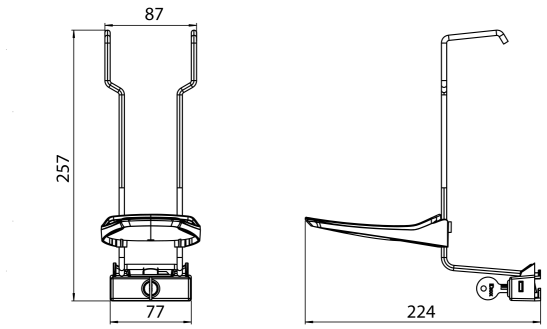

Maße in mm - Dimensions in mm



5 YEAR OPHARDT WARRANTY

References
hospitals, clinics, retirement/care homes, dental practices, commercial kitchen, food processing areas, laboratories, rescue stations, administration facilities

Usage examples
Passage area, entrance area, Intensive care units, dialysis stations, surgery areas, nursing and examination rooms, clean room, therapy rooms

Technical data

rounded/rectangular drip tray:	rounded drip tray
Housing:	Stainless steel
Filling volume (ml):	1000 ml
Lock:	ingo-man vandalism-proof lock made of plastic
Mounting:	for dispenser tied mounting
Warranty:	5 years
Dimensions (W x H x D) in mm:	87x257x224